TTV WAFER VALVE

20W3040S0

Wafer Butterfly Valve · DN250-400

Ref. W2504002030405O

Ductile Iron body, Stainless Steel disc and SILICONE VQM seat. Supplied with a bare shaft and top flange for a gearbox or actuator.

- Face to face EN 558 Series 20
- Pressure tested to EN 12266-1, ISO 5208
- Tightness ISO 5208, zero leakage API 598
- ISO 5752 Connection F10 / F14
- Mounts between PN10/16 flanges

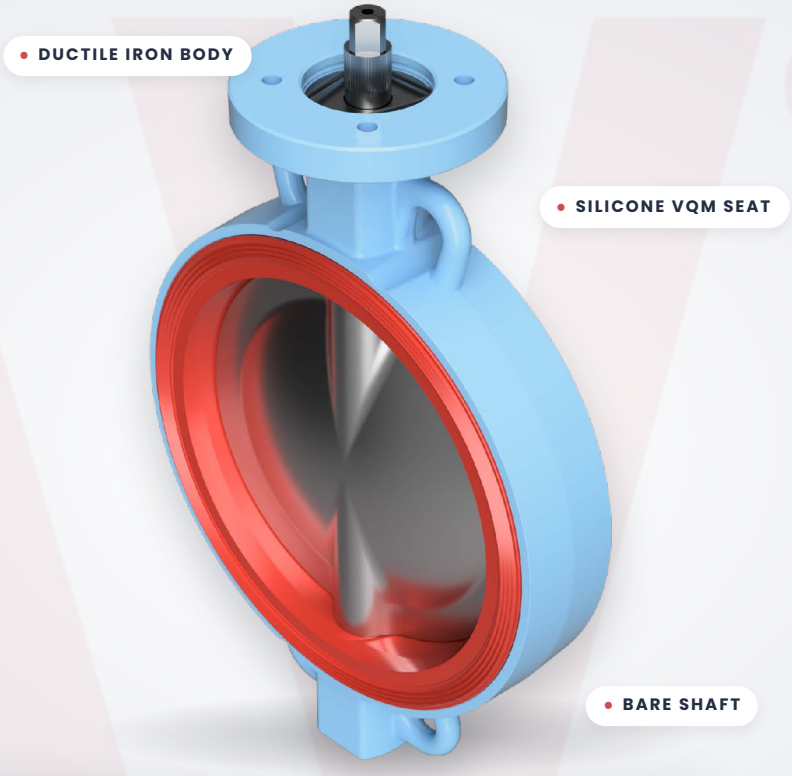

250-400 mm	PN10-16 · ANSI 150	-30...+150 °C	SILICONE VQM
NOMINAL SIZE (DN)	PRESSURE RATING	TEMPERATURE RANGE	SEAT MATERIAL

Construction.

MATERIALS OF CONSTRUCTION

BODY	SHAFT	DISC	SEAT
Ductile Iron	**Stainless Steel**	**Stainless Steel**	**SILICONE VQM**
EN 1563 - GJS500-7	ASTM A182 F304	ASTM A351 CF 8M	

MOUNTING BETWEEN FLANGES
PN10/16 · ISO 7005, DIN 2501, EN 1092-1 · ANSI class 150: ANSI B16.5

FACE TO FACE
EN 558 Series 20 · ISO 5752 Series 20 · API 609 Table 1 · BS 5155 Series 4

PRESSURE TEST
EN 12266-1, ISO 5208: Body: 1.5×PN · Seat: 1.1×PN

TIGHTNESS TEST
ISO 5208, zero leakage API 598

TEMPERATURE
-30ºC up to +150ºC

TECHNICAL DATA

Dimensions & standards.

Wafer DN250-400 | PN10-16 & ANSI 150
Valve with bare shaft

Model shown on source sheet: 20W3040 SILICONE VQM. Source: TTV datasheet ref. W2504002030405O, revision 0 (14-2-2020).

DIMENSIONAL DRAWING

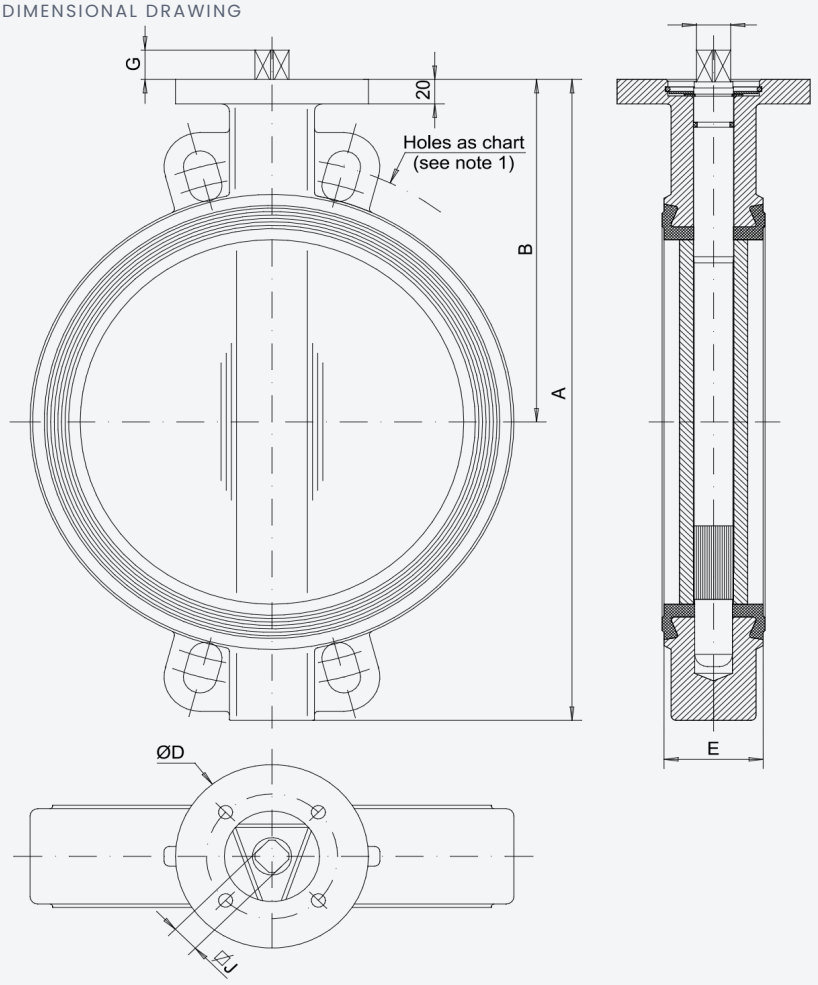

STANDARDS & RATINGS

Temperature
-30°C up to +150°C

Tolerances
ISO 2768-M

Face to Face
EN 558 Series 20
ISO 5752 Series 20
API 609 Table 1
BS 5155 Series 4

Pressure test according to
EN 12266-1, ISO 5208:
Body: 1.5×PN
Seat: 1.1×PN

Mounting between flanges
PN10/16
ISO 7005, DIN 2501, EN 1092-1
ANSI class 150: ANSI B16.5

Tightness test
ISO 5208, zero leakage API 598

Dimensions.

20W3040S0 · DN250-400

DN		A	B	D	E	F	G	J	ISO 5752 Connection	Weight Kg
mm	inch									
250	10"	461	248	150	68	25	24	19	F10	21,5
300	12"	524	280	150	78	28	24	22	F10	30
350	14"	570	300	170	78	28	29	22	F14	39
400	16"	644	340	170	102	35	29	27	F14	52

(Note 1) Holes as PN10-16 & ANSI 150Lb

(Note) dimensions and standards may vary without announcement. Colours are orientative.

Data supplied by TTV and provided for reference only. Specifications may change without notice – please confirm details with Actuation Valve & Control before ordering.

Need this valve automated?
Talk to our UK team about gearboxes, actuators and complete actuated valve packages.
actuation.co.uk